CRITICAL LIFT EVALUATION FORM

PERSON REQUESTING THE LIFT

Print Name : ALI JAVIDFAR **Dept/Div. :** C-AD **Date:** February 10, 2003

PERSON IN CHARGE (PIC)

Print Name: ALEX KOROL / JIM O'MALLEY (PLANT ENGINEERING)

PIC must be present during the entire CRITICAL LIFT and be QUALIFIED to resolve any question or problems that might arise during the lifting operation.

DETERMINING FACTOR FOR CRITICAL LIFT

✓ Load is greater than 85% of rated mobile crane capacity, or greater than 95% of rated fixed crane capacity, or greater than 50 tons.

____ Two or more cranes/booms are required or special hoisting/rigging equipment will be used.

____ Potential for release of radioactive/hazardous due to collision, or upset of load.

✓ Damage that would result in more than 3 weeks or 30% delay to schedule, or monetary value damages of $250,000 or greater. **SEE PAGE 4 FOR CRYOGENIC PIPE ISOLATION PROCEDURE.**

OPERATING EQUIPMENT (mobile crane)

Type of Crane: 100' LATTICE BOOM Manufacturer: GROVE
Model No.: GROVE HL 150T Serial No.: 77905
Manufacturer Restriction for WIND SPEED: 20 MPH (no lifts at wind speeds of 25 mph or greater)
Crane Equipped with Anemometer: NO (if not, Use BNL Weather Station)
Copies of Latest Annual Inspection: YES Latest Calibration Date of Instruments:
Operator Licensed for Equipment: YES Expiration Date: N/A

OPERATING EQUIPMENT (overhead cranes)

Type of Crane: N/A Manufacturer: N/A
Capacity: N/A Latest Calibration Date of Instruments: N/A
Date of Latest Annual Inspection: N/A Operator's SAC Expiration Date: N/A

DESCRIPTION OF ITEMS TO BE LIFTED

A pre-engineered cryogenic steel tank (80K Cooler). 46 feet Long, 10 feet Wide, 12 feet High

See attached sketch and pictures. [1, 9]

Note 1: The initial lift of the object is not a critical lift. Only LIFT over VJRR pipes is "Critical".

Note 2: 80K Cooler Tank will be certified and stamped by ASME for material and workmanship.

HOW WEIGHT OF OBJECT OBTAINED:

A. Certified Weight Scale: A CERTIFIED SCALE WEIGHT WILL BE OBTAINED PRIOR TO LIFT WHICH SHALL NOT EXCEED 65,000 LBS.

Ticket #: 61,400

B. Calculated Independently by More then One Source

1. Source Manufacturer (PHPK) Weight 59,335 Lbs. [12]
2. Source _____ Weight _____

C. If lift is an existing item (being removed or demolished), the weight must be recalculated, taking into account all modifications, including internal, as well as an Allowance for Scale, Sediment, Sludge, and Insulation. Calculation Work Sheets SHALL be included in the LIFT PLAN and have a PE stamp or be signed off by a QUALIFIED PERSON. **(When weights are calculated, a 10% tolerance margin shall be added. This value may be increased at the discretion of the Lifting Safety Committee).**

D. Shipping Manifests Weight: N/A Manufacturer Data Weight: N/A

CENTER OF GRAVITY (CG)

CG will be marked onto load, and a drawing included showing how it was determined. C.G. WILL BE MARKED BY MFG. ONTO THE TANK. ENGINEER SHALL VERIFY THE LOCATION AS PER SUBMITTED DRAWING BEFORE LIFTING.[12]

DESCRIPTION & WEIGHT OF ALL RIGGING EQUIPMENT & CRANE ATTACHMENTS

Type of slings: (2) TWIN PATH (KEVLAR) Rated Capacity: 90,000 Lbs On Straight Vertical Lift Weight: 30 Lbs. Each

Shackles: (2) STEEL .....50 TON .....100 Lbs. Each
(1) STEEL ..... .25 TON ..... 50 Lbs. Each

Lifting Rings/: N/A .....
Eyebolts N/A .....
Riggings Hooks N/A .....

Load Block/Jib .....2,800 Lbs.

Spreader Bars/Below the Hook Lifting Devices Rated Capacity: N/A Weight: N/A
(must comply with ASME B30.20 Standard for Design, Testing, and Appropriate Markings)

WEIGHT OF OBJECT, RIGGING EQUIOPMENT, & CRANE ATTACHMENTS

Source: CRANE OWNER'S MANUAL Total Weight: 68,110 Lbs. [5]

EQUIPMENT AND LIFT RELATIONSHIP

A. Maximum Operating Radius: 45 FEET
B. Planned Operating Radius: 42 FEET
C. Allowable load at maximum lift radius anticipated (from Load Chart): 69,300 Lbs.[7]
D. Ratio of Lift to Allowable Load: 98.2% [7]
E. Clearance between Boom & Lift: 20' (+) AT SETTING
F. Clearance to Surrounding Facilities/Utilities: MIN. OF 2 FEET TO VJRR PIPES
5 FEET MINIMUM TO OTHER OBJECTS
G. Clear Path for Load Movement: OBSTRUCTION FREE OVER EXISTING VJRR PIPES [1]

STABILITY OF GROUND AREA

A. Soil Bearing Capacity: 6,000 psf Source: P.E. BORING LOGS AND FIELD OBSERVATIONS
B. Mats Required: (1) 4' x 10' x 2" THICK STEEL PLATE UNDER N/E OUTRIGGER
(1) 4' x 6' x 2" THICK STEEL PLATE UNDER OTHER THREE OUTRIGGERS
(1) 3' x 3' x 1" THICK PLATE UNDER NOSE OUTRIGGER
C. Underground Utilities Location: SET OF 6" DIA. STEEL ELECTRICAL CONDUITS [8]
D. Ratio of Soil Bearing Capacity to Actual: 1.17[8]

LIFTING OPERATION

A detailed drawing, to scale, MUST be included showing the Set-up Area, Lifting Area, Load Placement Area, and Sling Attachment Points w/sling angle reduction factor. (Dwg. 906-SK-1 is Attached)

INSPECTION OF CONTRACTORS EQUIPMENT

All contractors' Lifting and Rigging Equipment must be inspected before being brought onto the BNL Site by BNL Hoisting & Rigging Inspector: Contact: John Hynan: (631) 344-5456 (LIFT WILL BE PERFORMED BY BNL RIGGERS)

LIFT APPROVAL SIGNATURES

Professional Engineer/ Qualified Person: Ali Javidfar (C/AD).....
Person in Charge (PIC): Alex Korol / James O'malley (P.E.).....
Operator of Equipment: Roy Johnson (P.E.).....
Responsible Manger or Designee: Alex Korol / James O'malley (P.E.).....

Lifting Safety Committee Recommendation: Approve: ✓ Disapprove: _____

LSC Committee Chair: _____

FINAL APPROVAL SIGNATURE:
Deputy Director for Operations

PRE-LIFT MEETING

Date: 2-14-03 Time: 8:05 Location: TRAILER

LIST OF ALL ATTACHMENTS:

BNL

1- Dwg. 906-SK1 RIGGING PLAN
2- Dwg. 906-SK2 LIFTING VIEW
3- Dwg. 906-SK3 VIEW AT LIFTING
4- Dwg. 906-SK4 VIEW AT SETTING
5- WEIGHT CALCULATION
6- SLING FORCE CLACULATION
7- LAOD AND RADIUS CALCULATIONS
8- SOIL BEARING CAPACITY CALCULATIONS
9- PLANT ENGINEERING'S SITE MAP FOR SUBJECT AREA (PARTIAL)
10- PICTURE OF TANK AND LIFTING ASSEMBLIES
11- 150 TON GROVE DETAILS AND LIFTING TABLE

MANUFACTURER (PHPK Technologies, Inc.)

12- Dwg. 02-0645-5000 TANK DIMENSIONS AND LOCATION OF C.G.
13- WEIGHT AND C.G. CALCULATIONS
14- LIFTING LUG CAPACITY CALCULATIONS
15- MANUFACTURER'S CERTIFICATE OF MATERIAL COMPLIANCE

CRYOGENIC PIPE ISOLATION PROCEDURE.

PRIOR TO START OF THE LIFT, PERSON IN CHARGE OF RIGGING SHALL COORDINATE WITH TONY NICOLETTI (X-3961)OF CRYOGENIC DIVISION TO SETUP A COMMUNICATION MEANS IN ORDER TO ISOLATE SECTION OF CRYOGENIC PIPES WITHIN THE RIGGING AREA IMMEDIATELY, IF A CATASTROPHIC FAILURE HAPPENS, CAUSING PIPE(S) TO RUPTURE.

REF. #2

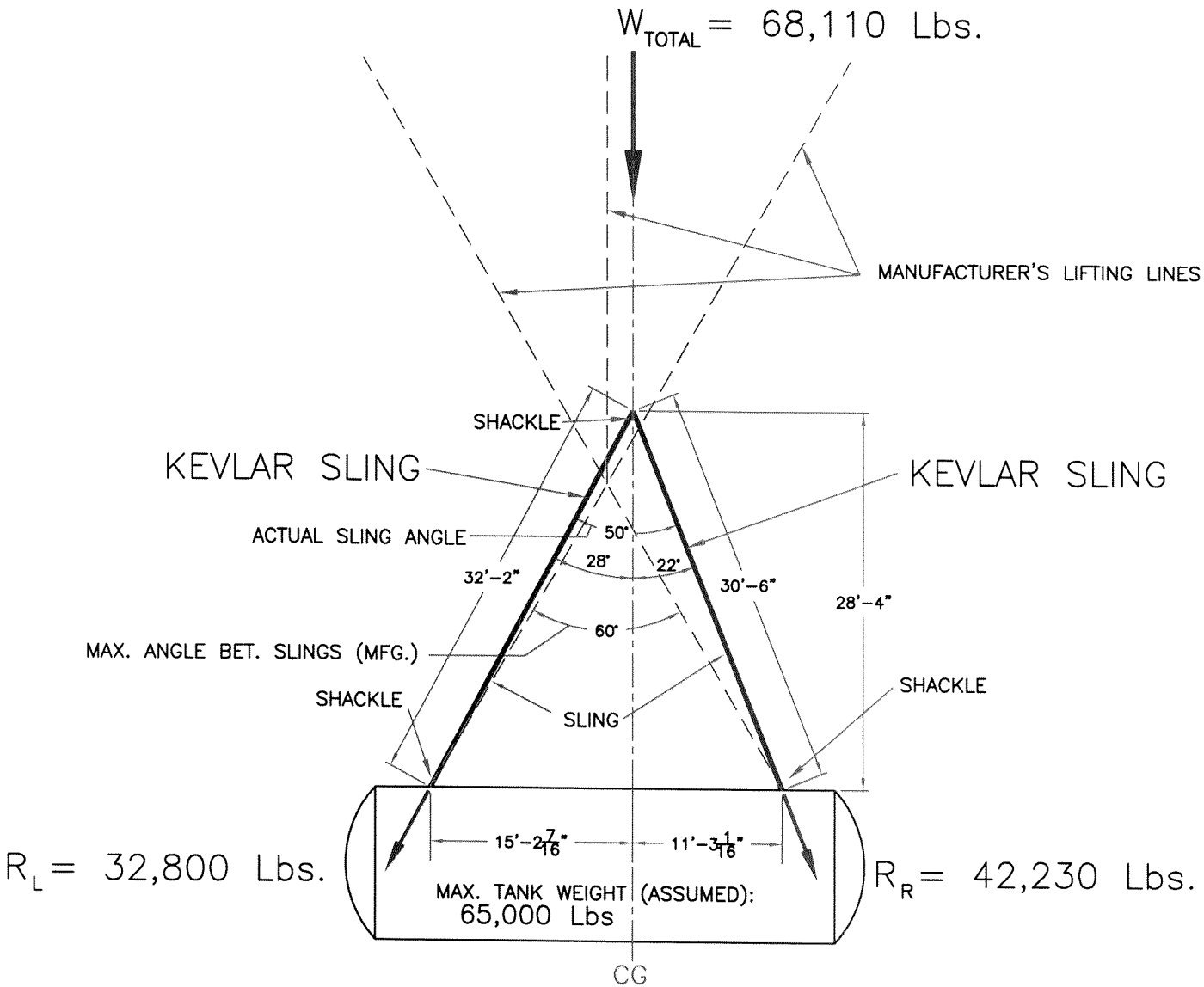

LIFTING VIEW, LOOKING NORTH

NOT TO SCALE

80K COOLER TANK RIGGING SLING CONFIGURATION

RHIC / BLDG. 1006B
906-SK-2
PREPARED BY: ALI JAVIDFAR

BLDG. 1006B

3.0/12918e011.pdf (10/2005)

REF. #5

WEIGHT CALCULATIONS:

RIGGING EQUIPMENT:

SLINGS	2 x 30lbs	= 60
SHACKLES	2 x 100 lbs	= 200
	1 x 50 lbs	= 50
		310 lbs

CRANE ATTACHMENTS:

LOAD BLOCK ..... = 2,800lbs

OBJECT (80K COOLER TANK):

TOTAL CALCULATED WEIGHT [11]	= 62,665 lbs
DEDUCTION FOR SIDEWALKS (NOT ATTACHED)	= -3,310 lbs
TOTAL:	= 62,465 lbs

MAXIMUM WEIGHT ASSUMED FOR TANK	= 65,000 lbs
RIG. EQUIP. + CRANE ATTACHMENTS	= 3,110 lbs
TOTAL WEIGHT USED IN CALCULATIONS	= 68,110 lbs

NOTE: The Certified Scale Weight of the Tank not to exceed 65,000 lbs.

TITLE SLING FORCE CALCULATION REF.

PAGE REF. #6

JOB NO.

DATE

BY

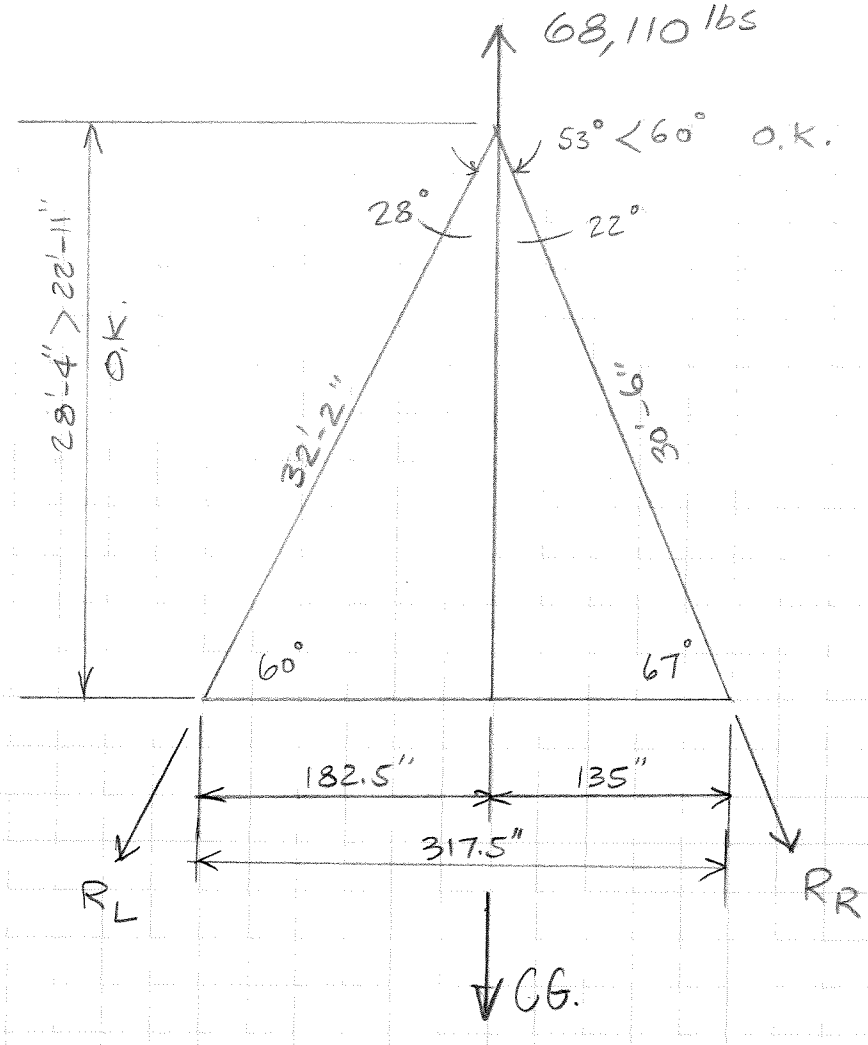

$$R_L = \frac{68{,}110 \times 135''}{(317.5)(\cos 28^\circ)} \cong 32{,}800^{\#} \quad (16.4 \text{ Tons})$$

$$R_R = \frac{68{,}110 \times 182.5}{(317.5)(\cos 22^\circ)} \cong 42{,}230^{\#} \quad (21.12 \text{ Tons})$$

Form 1881A

TITLE 80K COOLER RIGGING
EQUIPMENT & LIFT RELATIONSHIP
100' BOOM

PAGE REF #7
JOB NO.
DATE
BY

TOTAL LOAD 68,110 lbs

A) MAX. OPERATING RADIUS:

1) OVER REAR (FROM CHART) = 45' (78,800 lbs)

2) @ 360° (SIDE) = 45' (FOR 69,300 lbs)

B) PLANNED OPERATING RADIUS:

1) OVER REAR (SETTING) = 42' = (78,800 45') ✓

2) @ 360° (LIFTING) = 37' = (69,300 45') ✓

C) ALLOWABLE LOAD AT MAX. ANTICIPATED LIFT RADIUS (FROM CHART)

1) OVER REAR (SETTING) = 78,800 lbs

2) @ 360° = 69,300 lbs

TITLE _____ PAGE _____

JOB NO. _____

DATE _____

BY _____

D) RATIO OF LIFT TO ALLOWABLE LOAD

1) REAR $\frac{68,110}{78,800} = 0.864$

2) @ 360° (LIFT) $= \frac{68,110}{69,300} = 0.983$

E) CLEARANCE

1) @ 360° LIFT 16'-4"

2) BOOM BACK TO 5' FROM BOOM

3) AT SETTING 20'-9"

TITLE 80K COOLER RIGGING
STABILITY OF GROUND

PAGE REF #8
JOB NO.
DATE
BY

A) SOIL BEARING CAPACITY 6,000 PSF

LOAD	68,110 #
CRANE	180,000
TOTAL	248,110 #

1) AT INITIAL LIFT

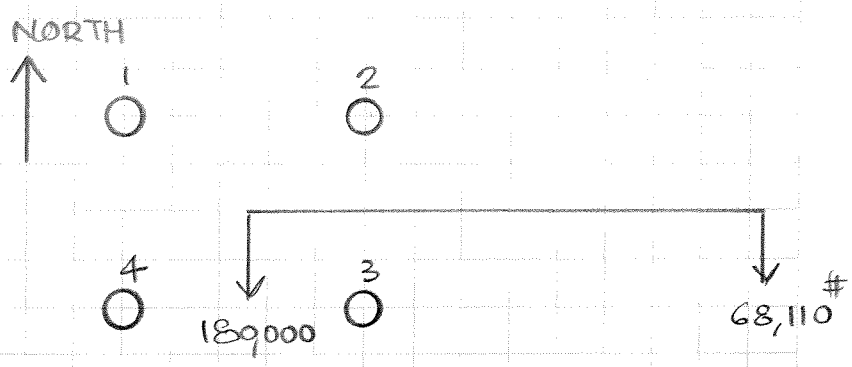

ASSUMING FULL LOAD ON 2 & 3

$$A_{REQ'D} = \frac{248,110}{2 \times 6000} = 20.68 \text{ S.F.}$$

USE 4' x 6' x 2" THICK STEEL PLATE
UNDER OUTRIGGERS 1, 3 & 4

Form 1881A

TITLE _____ PAGE _____

JOB NO. _____

DATE _____

BY _____

2) WHEN BOOM ALIGNED WITH OUTRIGGER #2

$\Sigma R_F = 0$

C.G. IS ASSUMED AT BOOM PIVOT (WORST CASE)

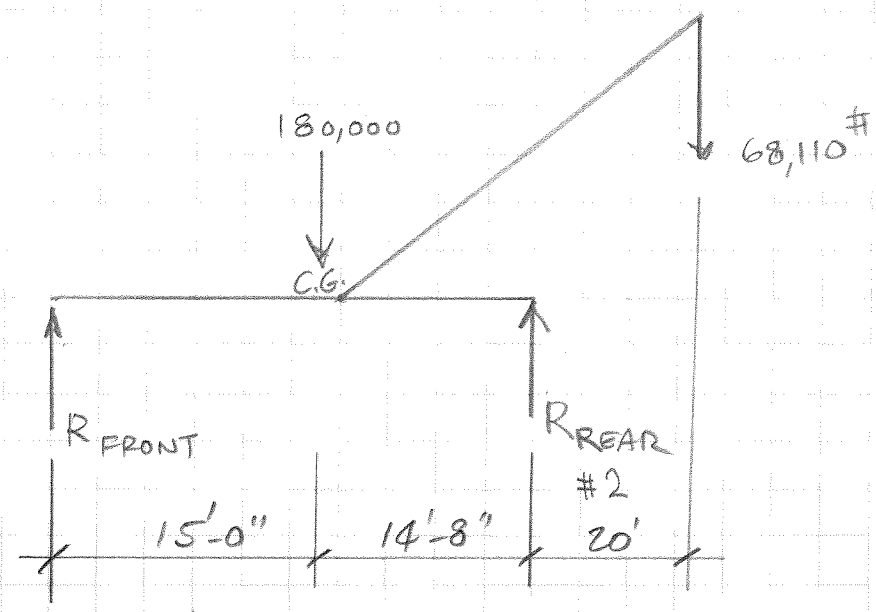

$\Sigma M_{R_F} = 0$

$$R_R = \frac{(180{,}000)(15') + (68{,}110)(49.68')}{(15'-0") + (14'-8")} \cong 205{,}000^{\#}$$

$$A_{REQ'D} = \frac{205{,}000}{6{,}000} = 34.17 \text{ S.F.}$$

USE (1) 4' x 10' x 2" STEEL PLATE $A = 40^{S.F.}$

$$\text{RATIO} = \frac{40}{34.17} = 1.17$$

Form 1881A

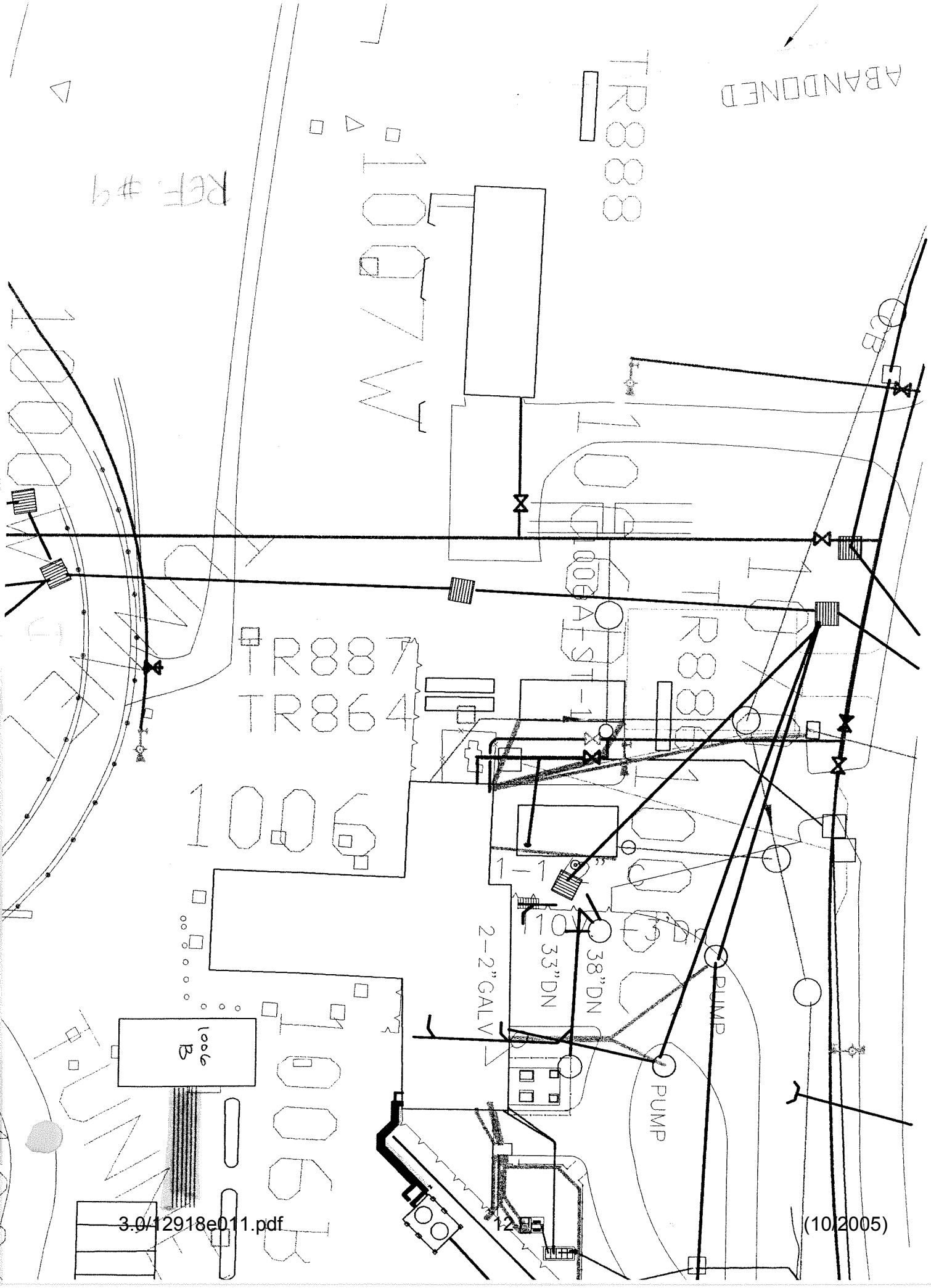
ABANDONED
TR888
REF #9
1007W
1008
TR887
TR864
1006
1006A-ST-1
1-1
2-2"GALV
33"DN
38"DN
PUMP
PUMP
1006 B

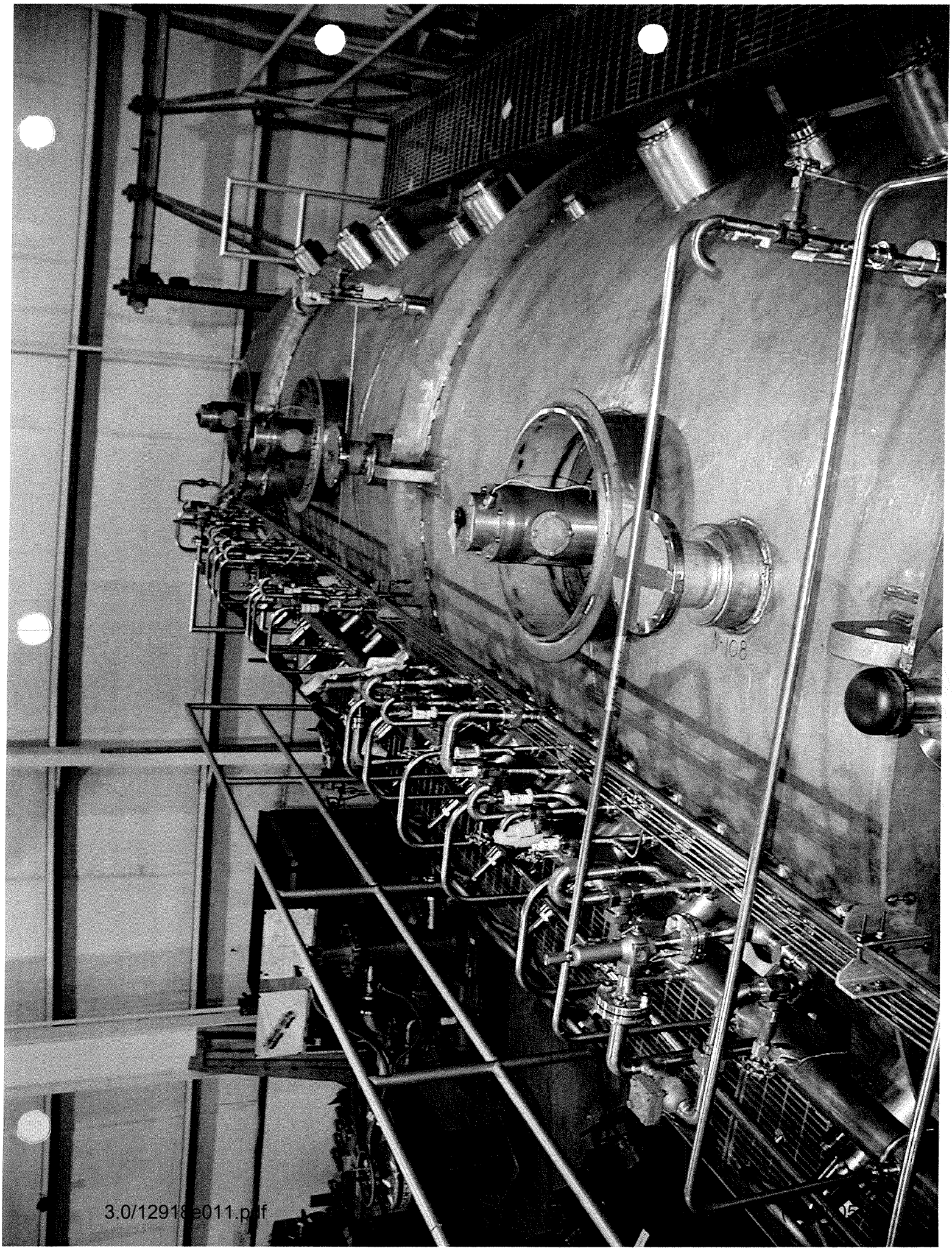

REF. #10

3.0/12918e011.pdf

68A BOOM – ON OUTRIGGERS OVER REAR
85% STABILITY

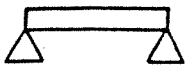

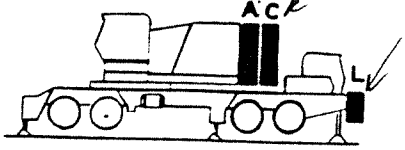

COUNTERWEIGHT CONFIGURATION

Usually only A & C are on ?

CAPACITY IN POUNDS
WITH A C + L COUNTERWEIGHTS

	BOOM LGTH	LOAD RAD	BOOM ANG	SHEAVE HGT	RATED LOAD
†002	50	12	81.9	57.1	300,000
	50	13	80.7	557.0	294,900
	50	14	79.6	56.8	273,400
	50	15	78.4	56.5	254,800
	50	16	77.2	56.3	238,400
	50	17	76.0	56.0	224,100
	50	18	74.8	55.7	211,300
	50	19	73.6	55.4	199,900
	50	20	72.4	55.1	189,500
	50	25	66.2	53.1	150,400
	50	30	59.7	50.4	124,300
	50	35	52.7	46.8	105,600
	50	40	44.9	42.2	91,600
	50	45	35.8	36.0	78,900
	50	50	23.7	26.8	68,200
†003	60	14	81.3	66.9	273,100
	60	15	80.3	66.8	254,500
	60	16	79.4	66.6	238,200
	60	17	78.4	66.3	223,800
	60	18	77.4	66.1	211,000
	60	19	76.4	65.8	199,600
	60	20	75.4	65.6	189,300
	60	25	70.4	63.9	150,100
	60	30	65.2	61.8	124,100
	60	35	59.8	59.0	105,400
	60	40	54.0	55.6	91,400
	60	45	47.7	51.4	79,000
	60	50	40.7	46.0	68,300
	60	60	21.5	28.6	53,300
†004	70	16	80.5	76.2	237,900
	70	17	80.1	76.6	223,600
	70	18	79.2	76.3	210,800
	70	19	78.4	76.1	199,400
	70	20	77.6	75.9	189,100
	70	25	73.3	74.5	149,900
	70	30	69.0	72.7	123,900
	70	35	64.5	70.4	105,300
	70	40	59.8	67.7	91,200
	70	45	54.9	64.4	79,000
	70	50	49.6	60.3	68,400
	70	60	37.5	49.4	53,500
	70	70	19.8	30.3	43,400
†005	80	17	81.3	86.7	223,200
	80	18	80.6	86.5	210,400
	80	19	79.9	86.3	199,000
	80	20	79.1	86.1	188,700
	80	25	75.5	84.9	149,500
	80	30	71.7	83.4	123,500
	80	35	67.9	81.4	104,900
	80	40	63.9	79.1	90,900
	80	45	59.8	76.3	78,900

	BOOM LGTH	LOAD RAD	BOOM ANG	SHEAVE HGT	RATED LOAD
	80	50	55.5	73.1	68,200
	80	60	46.2	64.7	53,300
	80	70	34.9	52.6	43,300
	80	80	18.4	31.9	36,200
†006	90	19	81.0	96.5	198,700
	90	20	80.4	96.3	188,400
	90	25	77.1	95.3	149,300
	90	30	73.8	93.9	123,300
	90	35	70.5	92.2	104,700
	90	40	67.0	90.2	90,700
	90	45	63.5	87.8	78,900
	90	50	59.8	85.0	68,200
	90	60	52.1	78.0	53,300
	90	70	43.4	68.7	43,400
	90	80	32.8	55.6	36,200
	90	90	17.3	33.4	30,900
†007	100	20	81.3	106.5	188,000
	100	25	78.4	105.5	148,900
	100	30	75.5	104.3	122,900
	100	35	72.5	102.8	104,300
	100	40	69.4	101.0	90,300
	100	45	66.3	98.9	78,800
	100	50	63.1	96.5	68,000
	100	60	56.5	90.5	53,100
	100	70	49.2	82.7	43,100
	100	80	41.0	72.5	36,000
	100	90	31.1	58.4	30,600
	100	100	16.4	34.8	26,500
†008	110	22	81.1	116.3	169,900
	110	25	79.5	115.7	148,500
	110	30	76.8	114.6	122,500
	110	35	74.1	113.3	104,000
	110	40	71.4	111.7	89,900
	110	45	68.6	109.8	78,600
	110	50	65.8	107.6	67,800
	110	60	59.9	102.3	52,900
	110	70	53.6	95.6	42,900
	110	80	46.7	87.1	35,800
	110	90	39.0	76.0	30,500
	110	100	29.6	61.0	26,400
	110	110	15.6	36.2	23,000
†009	120	24	80.9	126.1	154,600
	120	25	80.4	125.9	148,000
	120	30	77.9	124.9	122,000
	120	35	75.5	123.7	103,500
	120	40	73.0	122.2	89,500
	120	45	70.5	120.5	78,400
	120	50	67.9	118.5	67,600
	120	60	62.6	113.8	52,700
	120	70	57.1	107.8	42,700

	BOOM LGTH	LOAD RAD	BOOM ANG	SHEAVE HGT	RATED LOAD
	120	80	51.1	100.4	35,500
	120	90	44.6	91.2	30,200
	120	100	37.2	79.4	26,100
	120	110	28.3	63.5	22,800
	120	120	14.9	37.4	20,000
†010	130	25	81.1	136.1	147,600
	130	30	78.9	135.1	121,700
	130	35	76.6	134.0	103,200
	130	40	74.3	132.7	89,200
	130	45	72.0	131.1	78,200
	130	50	69.7	129.3	67,400
	130	60	64.9	125.0	52,500
	130	70	59.9	119.6	42,500
	130	80	54.6	113.1	35,300
	130	90	49.0	105.1	30,000
	130	100	42.8	95.2	26,000
	130	110	35.7	82.7	22,600
	130	120	27.1	65.9	19,900
	130	130	14.3	38.7	17,600
†011	140	27	80.9	145.9	135,800
	140	30	79.7	145.3	121,200
	140	35	77.6	144.3	102,800
	140	40	75.5	143.0	88,700
	140	45	73.4	141.6	78,000
	140	50	71.2	139.9	67,200
	140	60	66.8	136.0	52,300
	140	70	62.3	131.1	42,200
	140	80	57.5	125.2	35,100
	140	90	52.5	118.1	29,700
	140	100	47.1	109.4	25,700
	140	110	41.1	98.9	22,400
	140	120	34.3	85.8	19,600
	140	130	26.1	68.2	17,300
	140	140	13.7	39.8	15,400
†012	150	28	81.2	155.8	130,200
	150	30	80.4	155.5	120,800
	150	35	78.4	154.5	102,400
	150	40	76.5	153.4	88,400
	150	45	74.5	152.0	77,700
	150	50	72.5	150.5	66,900
	150	60	68.4	146.9	52,000
	150	70	64.3	142.4	42,000
	150	80	59.9	137.0	34,800
	150	90	55.4	130.5	29,400
	150	100	50.5	122.8	25,500
	150	110	45.4	113.7	22,100
	150	120	39.6	102.6	19,400
	150	130	33.1	88.8	17,100
	150	140	25.2	70.5	15,100
	150	150	13.3	41.0	13,500

RATED LOADS APPEARING IN SHADED AREAS ARE BASED ON STRUCTURAL OR OTHER FACTORS RATHER THAN STABILITY.

READ AND UNDERSTAND LIFTING CAPACITY NOTES ON A6-829-800021 LOCATED IN THE FRONT OF THIS MANUAL BEFORE OPERATING THIS MACHINE.

† LMI OPERATING CODE. REFER TO LMI MANUAL FOR INSTRUCTIONS.

SERIAL NUMBER

HL150T
IDENTIFICATION

A6-829-800011A
Page 1 of 3

REF #11

68A BOOM – ON OUTRIGGERS 360
85% STABILITY

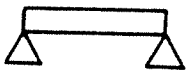

CAPACITY IN POUNDS.
WITH A C + L COUNTERWEIGHTS

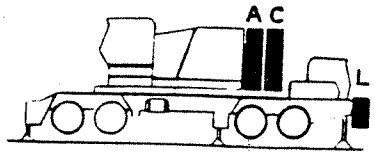

COUNTERWEIGHT CONFIGURATION

	BOOM LGTH	LOAD RAD	BOOM ANG	SHEAVE HGT	RATED LOAD
	50	12	81.9	57.1	300,000
	50	13	80.7	57.0	294,900
	50	14	79.6	56.8	273,400
	50	15	78.4	56.5	254,800
	50	16	77.2	56.3	238,400
	50	17	76.0	56.0	224,100
	50	18	74.8	55.7	211,300
†002	50	19	73.6	55.4	199,900
	50	20	72.4	55.1	189,500
	50	25	66.2	53.1	150,400
	50	30	59.7	50.4	124,300
	50	35	52.7	46.8	100,500
	50	40	44.9	42.2	82,300
	50	45	35.8	36.0	69,300
	50	50	23.7	26.8	59,600
	60	14	81.3	66.9	273,100
	60	15	80.3	66.8	254,500
	60	16	79.4	66.6	238,200
	60	17	78.4	66.3	223,800
	60	18	77.4	66.1	211,000
	60	19	76.4	65.8	199,600
	60	20	75.4	65.6	189,300
†003	60	25	70.4	63.9	150,100
	60	30	65.2	61.8	124,100
	60	35	59.8	59.0	100,700
	60	40	54.0	55.6	82,400
	60	45	47.7	51.4	69,400
	60	50	40.7	46.0	59,800
	60	60	21.5	28.6	46,300
	70	16	80.9	76.7	237,900
	70	17	80.1	76.6	223,600
	70	18	79.2	76.3	210,800
	70	19	78.4	76.1	199,400
	70	20	77.6	75.9	189,100
	70	25	73.3	74.5	149,900
†004	70	30	68.0	72.7	123,900
	70	35	64.5	70.4	100,800
	70	40	59.8	67.7	82,500
	70	45	54.9	64.4	69,500
	70	50	49.6	60.3	59,800
	70	60	37.5	49.4	46,400
	70	70	19.8	30.3	37,500
	80	17	81.3	86.7	223,200
	80	18	80.6	86.5	210,400
	80	19	79.9	86.3	199,000
	80	20	79.1	86.1	188,700
	80	25	75.5	84.9	149,500
	80	30	71.7	83.4	123,500
†005	80	35	67.9	81.4	100,800
	80	40	63.9	79.1	82,500
	80	45	59.8	76.3	69,400
	80	50	55.5	73.1	59,700
	80	60	46.2	64.7	46,300
	80	70	34.9	52.6	37,400
	80	80	18.4	31.9	31,000
	90	19	81.0	96.5	198,700
	90	20	80.4	96.3	188,400
	90	25	77.1	95.3	148,300
	90	30	73.8	93.9	123,300
	90	35	70.5	92.2	100,800
	90	40	67.0	90.2	82,400
†006	90	45	63.5	87.8	69,400
	90	50	59.8	85.0	59,700
	90	60	52.1	78.0	46,300
	90	70	43.4	68.7	37,400
	90	80	32.8	55.6	31,100
	90	90	17.3	33.4	26,300
	100	20	81.3	106.5	188,000
	100	25	78.4	105.5	148,900
	100	30	75.5	104.3	122,800
	100	35	72.5	102.8	100,700
	100	40	69.4	101.0	82,300
	100	45	66.3	98.9	69,300
†007	100	50	63.1	96.5	59,500
	100	60	56.5	90.5	46,200
	100	70	49.2	82.7	37,200
	100	80	41.0	72.5	30,900
	100	90	31.1	58.4	26,200
	100	100	16.4	34.8	22,400
	110	22	81.1	116.3	169,900
	110	25	79.5	115.7	148,500
	110	30	76.8	114.6	122,500
	110	35	74.1	113.3	100,600
	110	40	71.4	111.7	82,200
	110	45	68.6	109.8	69,100
	110	50	65.8	107.6	59,300
†008	110	60	59.9	102.3	46,000
	110	70	53.6	95.6	37,000
	110	80	46.7	87.1	30,700
	110	90	39.0	76.0	26,000
	110	100	29.6	61.0	22,300
	110	110	15.6	36.2	19,300
	120	24	80.9	126.1	154,600
	120	25	80.4	125.9	148,000
	120	30	77.9	124.9	122,000
	120	35	75.5	123.7	100,500
	120	40	73.0	122.2	82,000
	120	45	70.5	120.5	68,900
	120	50	67.9	118.5	59,100
†009	120	60	62.6	113.8	45,700
	120	70	57.1	107.8	36,800
	120	80	51.1	100.4	30,400
	120	90	44.6	91.2	25,800
	120	100	37.2	79.4	22,100
	120	110	28.3	63.5	19,100
	120	120	14.9	37.4	16,600
	130	25	81.1	136.1	147,500
	130	30	78.9	135.1	121,700
	130	35	76.6	134.0	100,200
	130	40	74.3	132.7	81,800
	130	45	72.0	131.1	68,700
	130	50	69.7	129.3	58,900
†010	130	60	64.9	125.0	45,500
	130	70	59.9	119.6	36,600
	130	80	54.6	113.1	30,200
	130	90	49.0	105.1	25,600
	130	100	42.8	95.2	21,900
	130	110	35.7	82.7	19,000
	130	120	27.1	65.9	16,500
	130	130	14.3	38.7	14,500
	140	27	80.9	145.9	135,800
	140	30	79.7	145.3	121,200
	140	35	77.6	144.3	100,100
	140	40	75.5	143.0	81,700
	140	45	73.4	141.6	68,500
	140	50	71.2	139.9	58,700
	140	60	66.8	136.0	45,300
†011	140	70	62.3	131.1	36,300
	140	80	57.5	125.2	29,900
	140	90	52.5	118.1	25,400
	140	100	47.1	109.4	21,700
	140	110	41.1	98.9	18,700
	140	120	34.3	85.8	16,300
	140	130	26.1	68.2	14,200
	140	140	13.7	39.8	12,500
	150	28	81.2	155.8	130,200
	150	30	80.4	155.5	120,800
	150	35	78.4	154.5	99,900
	150	40	76.5	153.4	81,500
	150	45	74.5	152.0	68,300
	150	50	72.5	150.5	58,500
	150	60	68.4	146.9	45,100
	150	70	64.3	142.4	36,100
†012	150	80	59.9	137.0	29,700
	150	90	55.4	130.5	25,100
	150	100	50.5	122.8	21,400
	150	110	45.4	113.7	18,400
	150	120	39.6	102.6	16,000
	150	130	33.1	88.8	14,000
	150	140	25.2	70.5	12,300
	150	150	13.3	41.0	10,800

RATED LOADS APPEARING IN SHADED AREAS ARE BASED ON STRUCTURAL OR OTHER FACTORS RATHER THAN STABILITY.

READ AND UNDERSTAND LIFTING CAPACITY NOTES ON A6-829-800021 LOCATED IN THE FRONT OF THIS MANUAL BEFORE OPERATING THIS MACHINE.

†LMI OPERATING CODE. REFER TO LMI MANUAL FOR OPERATING INSTRUCTIONS.

SERIAL NUMBER

HL150T
IDENTIFICATION

A6-829-800010A
Page 1 of 3

17,500
12,500
30,000

REI. #12

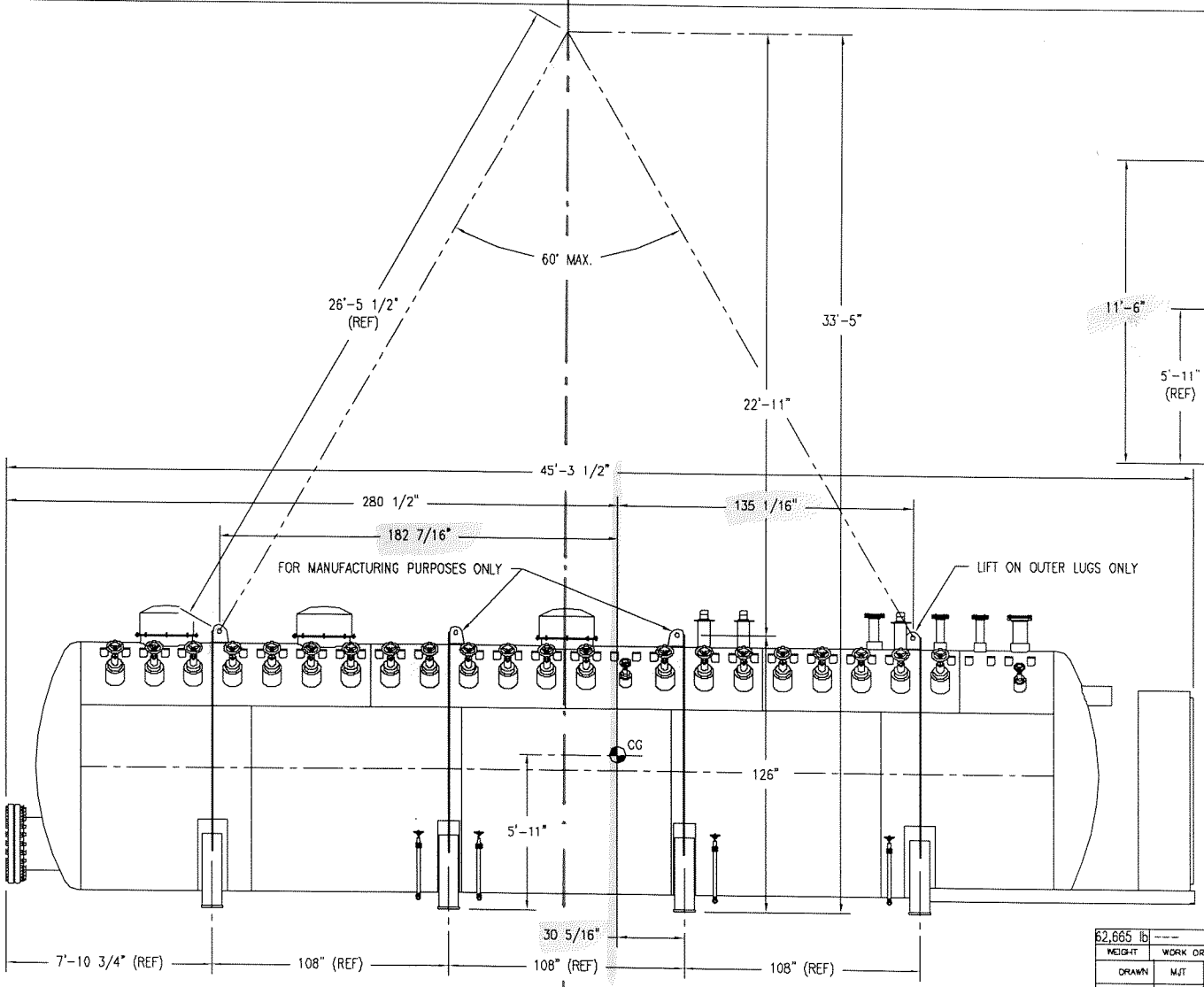

NORTH ELEVATION

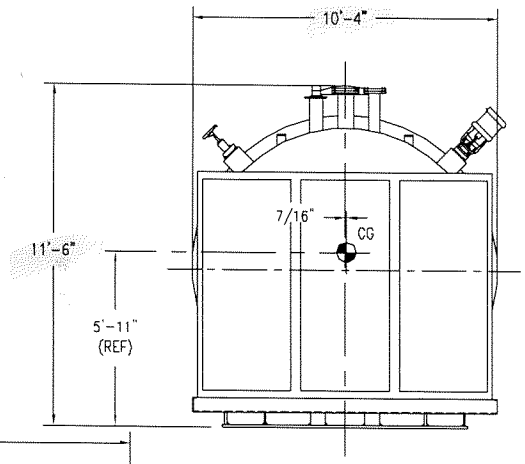

WEST ELEVATION

NOTES:

1. SHIPPING WEIGHT = 62,665 lbs.
2. ESTIMATED C.G.

CHG	DATE	DWN	CH'KD	APP'D	REV'D	DESCRIPTION
A	12-01-02	MJT	SW	SW		REVISED LOCATION OF CG

WEIGHT	WORK ORDER	CONTRACT NO.	PART NUMBER	NO. REQ'D	NEXT ASSEMBLY	SIZE
62,665 lb	---	---	---	---	---	-

		TOLERANCES	
DRAWN	MJT	FRACTION	±1/8"
CHECKED	SW	.XX	±.01
ENGINEER	SW	.XXX	±.005
REVIEWED		ANGULAR	±1/2°
RELEASE DATE	08-16-02		

DIMENSIONS ARE PROVIDED PRIOR TO SURFACE TREATMENTS UNLESS NOTED.

INFORMATION SHOWN ON THIS DRAWING IS PROPRIETARY AND THE SOLE PROPERTY OF PHPK AND IS NOT TO BE DISCLOSED OR TRANSMITTED TO UNAUTHORIZED PARTIES.

PHPK — PHPK TECHNOLOGIES INCORPORATED
WESTERVILLE, OHIO / COSTA MESA, CA.

TITLE: BROOKHAVEN NATIONAL LABORATORY
RHIC 80K COOLING SYSTEM
GENERAL ARRANGEMENT – RIGGING

SIZE: B — DRAWING NO. 02-0645-5000 — CHG. A

SCALE 1/4" = 1'-0" — SHEET 6 OF

3.0/12918e011.pdf REVISIONS (10/2005)

REF #13

PHPK

Technologies Incorporated

PHPK Technologies Inc.
535 Enterprise Drive
Westerville, OH 43081
Phone: (614) 436-9114
Fax: (614) 436-5816
E-mail: info@PHPK.com

Work Order: 02-0645
Client Name: Brookhaven National Laboratory
Subject: Weights of RHIC 80K Cooling System
Originator: Marc Townsend
Date: December 2, 2002

Dry Weight = 62665

CG: 23.70 71.03 0.41

Description	Code	Dwg #	Item lbs	X	Y	Z			
HX1	hx1		22	153.00	76.00	0.00	3366	1672	0
HX2	hx2	1307	2692	108.00	56.50	32.00	290736	152098	86144
HX3	hx3	1308	2898	-108.00	56.50	-32.00	-312984	163737	-92736
HX4	hx4	1309	2790	-108.00	56.50	32.00	-301320	157635	89280
HX5	hx5		143	207.00	81.00	0.00	29663.1	11607.3	0
HX6	hx6	1310	1788	108.00	52.50	-32.00	193104	93870	-57216
MCC with Frame	mcc		5941	273.00	94.00	0.00	1621893	558454	0
Wireway & External Piping	mcc		1500	0.00	115.00	0.00	0	172500	0
n15, n16, n26, n35	nozzle	1303, sht10	14	0.00	115.00	0.00	0	1610	0
n47, n48	nozzle	1303, sht10	12	0.00	115.00	0.00	0	1380	0
n51, n106, n108	nozzle	1303, sht10	57	0.00	115.00	0.00	0	6555	0
n54, n55	nozzle	1303, sht10	53	0.00	115.00	0.00	0	6095	0
n110, n111, n112	nozzle	1303, sht11	221	0.00	115.00	0.00	0	25415	0
n121	nozzle	1303, sht11	5	0.00	115.00	0.00	0	575	0
n114	nozzle	1303, sht16	302	0.00	115.00	0.00	0	34730	0
n123, n124	nozzle	1303, sht16	170	0.00	115.00	0.00	0	19550	0
n01-n09, n12-n14, n17-n25 n27-n29, n32-n34 n36-n42, n46, n62, n63 n125	nozzle	1303, sht6	117	0.00	115.00	0.00	0	13455	0
n10, n11, n30, n31 n41, n43, n44, n65	nozzle	1303, sht6	23	0.00	115.00	0.00	0	2645	0
n45	nozzle	1303, sht6	4	0.00	115.00	0.00	0	460	0
n60, n118-n120	nozzle	1303, sht7	27	0.00	115.00	0.00	0	3105	0
n64, n66-n69, n82, n83	nozzle	1303, sht7	73	0.00	115.00	0.00	0	8395	0
n50	nozzle	1303, sht8	4	0.00	115.00	0.00	0	460	0
n70-n76, n84-n105 n116	nozzle	1303, sht8	1330	0.00	115.00	0.00	0	152950	0
n107	nozzle	1303, sht9	23	0.00	115.00	0.00	0	2645	0
n49	nozzle	1303, sht9	6	0.00	115.00	0.00	0	690	0
n52, n53	nozzle	1303, sht9	60	0.00	115.00	0.00	0	6900	0
Spools	spool	5001-5102	2747	0.00	96.00	0.00	0	263712	0
8108	valve	n66	18	0.00	115.00	0.00	0	2041.25	0
8109, 8110	valve	n83	44	0.00	115.00	0.00	0	5002.5	0
8111-8131	valve	n70-n73 n84-n88 n91-n97 n102-n116	1554	0.00	115.00	0.00	0	178710	0
8132, 8133	valve	n100, n101	180	0.00	115.00	0.00	0	20700	0
8134-8136	valve	n64, n68 n69	105	0.00	115.00	0.00	0	12075	0
8137	valve	n67	39	0.00	115.00	0.00	0	4485	0
8138-8141	valve	n74, n76 n90, n99	536	0.00	115.00	0.00	0	61640	0
8142-8145	valve	n60 n118-n120	108	0.00	115.00	0.00	0	12420	0
8146-8148	valve	n75, n89 n98	411	0.00	115.00	0.00	0	47265	0
Instrument Tube Bulkhead	vessel	1317	8	0.00	64.00	0.00	0	512	0
Lifting Lugs	vessel	9961-05	80	0.00	64.00	0.00	0	5120	0
Lower Rings	vessel	9961-09	336	0.00	64.00	0.00	0	21504	0
Upper Rings	vessel	9961-10	129	0.00	64.00	0.00	0	8256	0
Shell	vessel	9970-01	1420	0.00	64.00	0.00	0	90880	0
Shell	vessel	9970-02	6012	0.00	64.00	0.00	0	384768	0
Shell	vessel	9970-03	5242	0.00	64.00	0.00	0	335488	0
Shell	vessel	9970-04	9615	0.00	64.00	0.00	0	615360	0
Heads	vessel	1303-06	3560	0.00	64.00	0.00	0	227840	0
Manway Flange	vessel	1303-18	200	0.00	64.00	0.00	0	12800	0
Manway Flange	vessel	1301-19	241	0.00	64.00	0.00	0	15424	0
Plate	saddles	1303-41	391	0.00	12.00	0.00	0	4692	0
Plate	saddles	1303-42	280	0.00	12.00	0.00	0	3360	0
Plate	saddles	1303-43	508	0.00	12.00	0.00	0	6096	0
Plate	saddles	1303-44	252	0.00	12.00	0.00	0	3024	0
Plate	saddles	1303-45	1158	0.00	12.00	0.00	0	13896	0
Plate	saddles	1303-46	632	0.00	12.00	0.00	0	7584	0
Plate	saddles	1303-47	368	0.00	12.00	0.00	0	4416	0
Plate	saddles	1303-48	88	0.00	12.00	0.00	0	1056	0
s1-s3, s9	pier	1303, sht15	1485	0.00	64.00	0.00	0	95040	0
s4-s6	pier	1303, sht15	157	0.00	64.00	0.00	0	10048	0
6" round	pier	1303-40	705	0.00	64.00	0.00	0	45120	0
Catwalks	catwalk	1306	3310	0.00	83.00	0.00	0	274730	0
Circulators	circ	n110-n112	471	-83.50	121.00	0.00	-39328.5	56991	0

PHPK

Technologies Incorporated

PHPK Technologies Inc.
535 Enterprise Drive
Westerville, OH 43081
Phone: (614) 436-9114
Fax: (614) 436-5816
E-mail: info@PHPK.com

Work Order	02-0645
Client Name	Brookhaven National Laboratory
Subject	Weights of RHIC 80K Cooling System
Originator	Marc Townsend
Date	December 2, 2002

Dry Weight = 62665

	X	Y	Z
CG	23.70	71.03	0.41

Description	Code	Dwg #	Item lbs	X	Y	Z

REF. #14

PHPK TECHNOLOGIES INCORPORATED

535 Enterprise Drive
Westerville, Ohio 43081

Phone: (614) 436-9114
Fax: (614) 436-5816

FAX TRANSMISSION

TO:	Tony Nicoletti	Date:	01-02-03
COMPANY:	Brookhaven National Laboratory	Fax:	631-344-3329
FROM:	Steve Willming	Phone:	631-344-3961
CC:		Pages (including cover):	4

Tony,

Per your request I'm faxing you the hand calcs of the lifting lugs. These are conservative because we did not include the rib and the columns. We typically would not take this any further unless these preliminary and fundamental calculations exposed potential problems.

Best Regards,
Steve Willming
Steve Willming
Project Engineer,
Engineered Products and Systems

PHPK

PHPK Technologies Inc.
535 Enterprise Drive
Westerville, OH 43081
Phone: 614-436-9114
Fax: 614-436-5816
E-mail: info@PHPK.com

Work Order	02-0645
Client Name	BROOKHAVEN NATIONAL LAB
Subject	80K COOLER CALC'S
Originator	S. WILLEMING
Date	3/4/02
Sheet	1 of 1

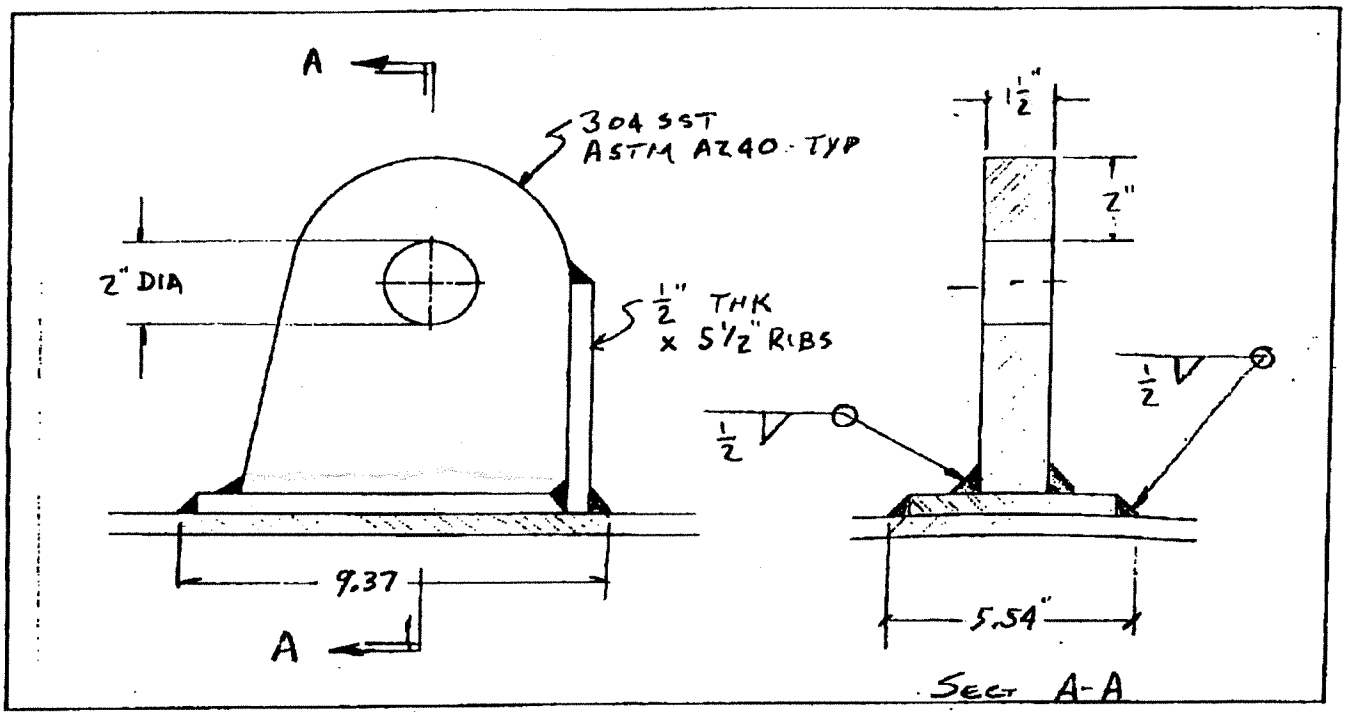

LIFTING LUG CALCULATIONS:

1) LOADS = APPROX $\frac{65,000\#}{2}$ = 32,500

PER LUG = 32,500 + 3500 = 36,000#

2) LUG AREA = (1.5)(2) = 3 SQ IN

3) LUG STRESS $\frac{36,000\#}{3 \text{ SQ IN}}$ = 12,000 PSI < 36,000 PSI
MARGIN OF SAFETY = 3

4) VESSEL AREA = PERIMETER = (9.37 x 2) + (5.54 x 2) = 29.82 IN
THK = .5 IN
AREA = .5 x 29.82 = 14.91 SQ IN.

5) VESSEL STRESS = $\frac{36,000\#}{14.91}$ = 2,415 PSI

REF #15

CERTIFIED MATERIAL TEST REPORT

SSC ORDER NO. 80638

STAINLESS STEEL PLATE AND PLATE PRODUCTS
TOOL AND DIE STEELS
THE COUNTRY'S MOST COMPLETE CUTTING SERVICE ORGANIZATION

ONE SANDMEYER LANE • PHILADELPHIA, PA 19116-3598 • 215-464-7100 • 800-523-3663 • FAX: 215-877-1430

ILL
O

PK TECHNOLOGIES
J ENTERPRISE DRIVE
STERVILLE, OH 43081

CERTIFICATE OF TEST

WE CERTIFY THAT THE CHEMICAL ANALYSIS AND MECHANICAL TEST RESULTS APPEARING IN THIS CERTIFICATE ARE CORRECT AND TRUE AS CONTAINED IN THE RECORDS OF THE COMPANY

SANDMEYER STEEL COMPANY

E. GARDOSH - MANAGER, QUALITY ASSURANCE

QUALITY CONTROL DEPARTMENT

JSTOMER ORDER NO. 14687

ATE: 06/04/02

DE: UNS S30400 | SPECIFICATION: ASME SA-240 2001 ED. | HEAT NO.: L3189

CES	DESCRIPTION
	SSC TYPE 304 PLATE
4	1-1/2" THK PER DRAWING 9961-05 CUT LEVEL: 80% (QZ)

HEAT NO.	C	Mn	P	S	Si	Ni	Cr	N
39	0.064	1.390	0.026	0.002	0.411	8.080	18.210	0.061

EAT NO.	Yield #	Tensile #	Elong	Hardness		
9	41,600	88,400	59% IN 2"	RB 79		

S/IN2 MATERIAL SOLUTION ANNEALED AT 1900 DEGREES F MINIMUM AND WATER QUENCHED OR RAPIDLY COOLED BY AIR

PO 14687
IT 5

TITLE 80 K COOLER RIGGING
LIFTING LUG ANALYSIS

PAGE
JOB NO.
DATE
BY

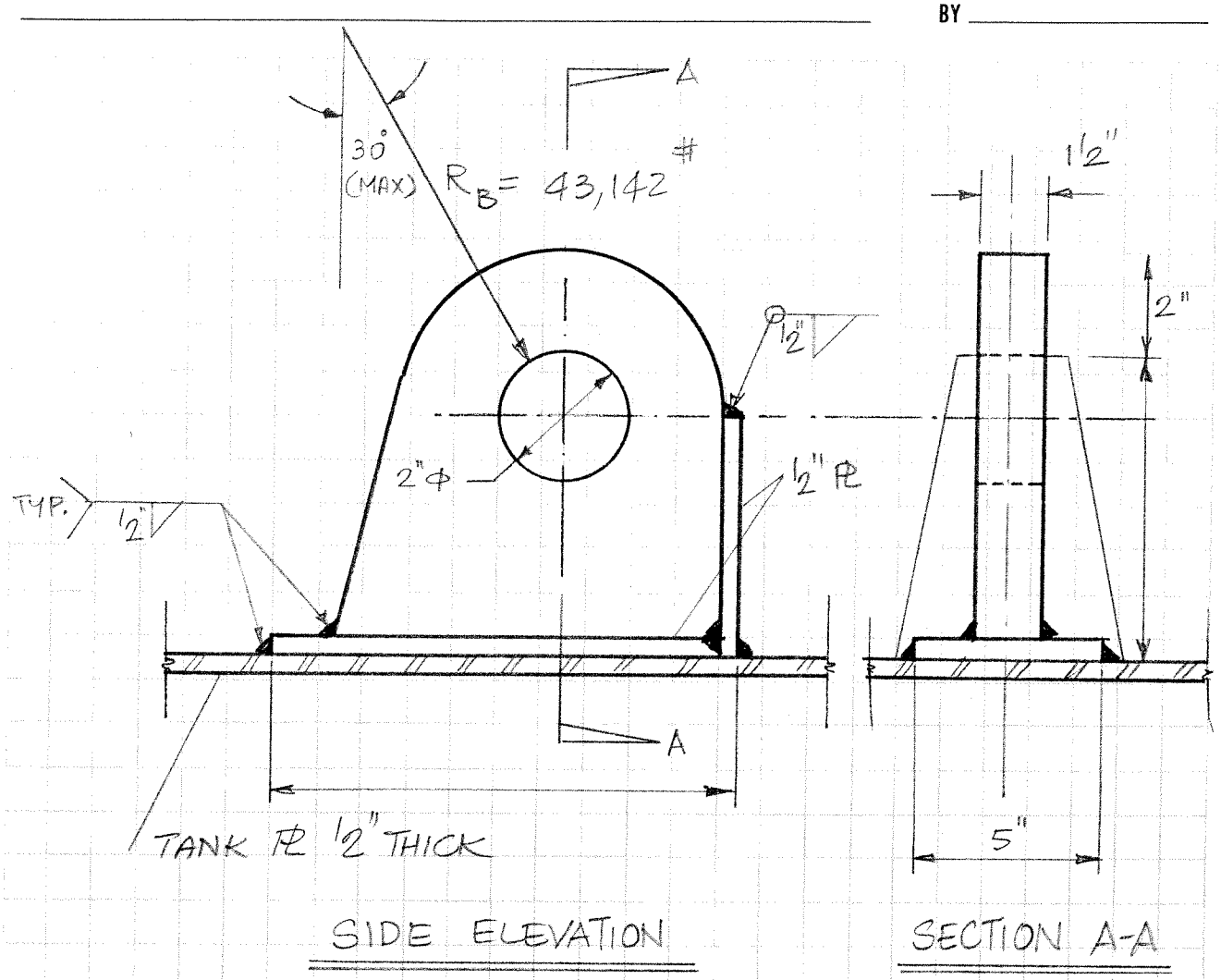

LIFTING LUG MATERIAL (PER MFG): 304 S.ST
ASTM A240 (TYP.)

Form 1881A

TITLE _____ PAGE _____
JOB NO. _____
DATE _____
BY _____

$F_y = 36$ ksi — PER MFG.

$F_t = 0.45 F_t$ — AISCS D3.1

$F_t = 0.45(36) = 16.2$ ksi

$R_B = 43,142$ #

– IMPACT FACTOR 10%

$R_B = 43,142 \times 1.10 \cong 47,500^{\#}$

$$A_{n(REQ'D)} = \frac{47,500}{16,200} = 2.932 \text{ in}^2$$

$$A_{n(PROV.)} = (2)(\overset{MIN.}{2.0''})(1.5'') = 6.0 \text{ in}^2 > A_{n(REQ'D)}$$

$$F.S. = \frac{6.0}{2.932} \cong 2.0$$

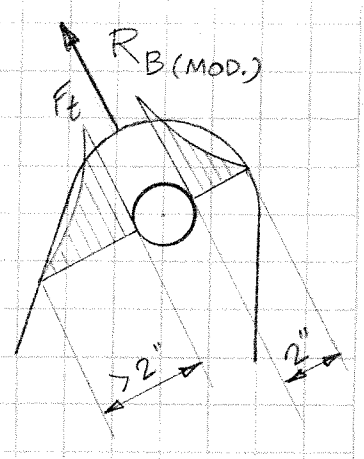

Form 1881A

BROOKHAVEN NATIONAL LABORATORY

Plant Engineering PM Work Order

PM Work Order No. EP0051793- 6/26/2002 10:13:07AM Page 1

Task Description: MOBILE CRANE INSPECTION / MAINTENANCE **Craft:** 792

Request Time	10:05:14	WO Type	PM
Request Date	7/ 1/2002	Work Order Status	OPEN
Scheduled Start Date	7/ 1/2002	Closed Date	
Scheduled Finish Date	8/29/2002	Priority (1-8)	5
Completion Date			

Equipment No. 326CR-88687
Equipment Description CRANE, TRUCK (LATTICE)
Location 326
Floor MAIN
Room ALL
Services

Manufacturer GROVE
Serial No. 77905
Model No. HL 150T
Department EP
Project ID. 03834
Activity ID 03834
Group: SITE

Work Permit Required: No **QA Class: A3**

Notes:

BC #88687, BNL #124868, CAPACITY 90 TONS=180,000 LBS.

CRANE HOOK INSPECTION: 07/22/99, AA= 12", BB= 12"
CRANE HOOK INSPECTION: 08/14/00, AA= 12.020", BB= 12"
LAST CRANE HOOK INSPECTION: 07/31/01, AA= 12.020", BB= 12"
8/13/02 A: 12.03 B: 12

Name Plate Data:

CAPACITY 90 TONS
GEAR BOX OIL AMOUNT
GEAR BOX OIL TYPE
LASTOIL CHANGE TYPE

Last Service Meter: 2,711 **Date Last Recorded:** 5/30/2002 **Record New Meter Reading:** _____

Stock/PO No.	Description	Qty Used	Date Used

The following information must be enterd on the lines below:

Life Number	Employee Name	Work Date	Regular Hours	Overtime Hours
22035	J. Hyman	8/13/02	2	

Supervisors Signature: _____ **Date Complete:** _____

MOBILE CRANE & BOOM TRUCK INSPECTION REPORT

Dept/Div: EP-HEMO'S **Equip. #:** 326 CL-88687 **Date:** 8/13/02
GROVE HL 150-T TAG # 355

Item	NDF*	SR*	Item	NDF*	SR*
GENERAL			**CARRIER**		
Appearance	✓		Tire Condition		CRACKED
Paint	✓		Brakes	✓	
Cab	✓		Steering	✓	
Fire Extinguisher (5 BC min.)	✓		Outriggers	✓	
Glass	✓		Glass	✓	
Safety Glass Used			Controls	✓	
Boom	✓		Fire Extinguisher (5 BC min.)	✓	
Angle indicator	✓		Serial No.	✓	
Load Indicator (CALIBRATION)	✓		**BOOM**		
Load Charts	✓		Number or Type	LATT	
Grease/Oil Leaks	✓		Length 100'	✓	
CARRIER & CRANE ENGINE			Tagline		
Oil Level & Condition	✓		Sections		
Hour Meter 1728	✓		Damage	✓	
Operating Conditions	✓		Boom Stops	✓	
Cooling System	✓		Auto Boom Stops	✓	
Anti-Freeze	✓		Auto Mast Stop		
Battery Condition	✓		**GANTRY SHEAVES**		
Air System	✓		Condition	✓	
Pressure	✓		Pendants Lubed	✓	
Engine Instruments	✓		Condition	✓	
All Guards in Position	✓		Load Block	✓	
DRAW WORK			Capacity 100-T	✓	
Boom Hoist	✓		Condition	✓	
Clutch	✓		Hook	✓	
Brake	✓		Safety Latch	✓	
Pawl	✓		Jib		
Swingshaft	✓		Length	NA	
Clutches	✓		Condition		
Brake	✓		**WIRE ROPE**		
Drum Shaft	✓		Kinks, Broken Strands, Abuse	✓	
Flanges - Left Hand	✓		Jib Pendants		
Flanges - Right Hand	✓		Load Line 1"	✓	-.010
Brakes - Left Hand	✓		Whip Line		
Brakes - Right Hand			Anti-two Block System		X
Third Drum			Load Indicator System	✓	
Clutch			**BOOM TRUCK CARGO BODY**		
Brake	NA		Body Condition - Stakes	NA	
Control Operation			Cargo Tie-Down Straps		

** NDF = No Defects Found; SR = Service Required*

COMMENTS:

(continue comments on back if necessary)

Name: [signature] **Life #:** 22035

EP-ES&H-702B; Rev. 0: 06/01/94; Apprv: [signature]

326 CR. 88687
GROVE

TAG # 355

BNL CRANE / HOIST HOOKS INSPECTION

This inspection SHALL BE done at least once a year and recorded on this form and attached to the BNL CRANE / HOIST ANNUAL INSPECTION record. It should be done at the same time as the crane / hoist inspection.

On all reload testing of cranes / hoist the HOOK SHALL ALSO BE reinspected.

A copy of this inspection shall be kept on file with the crane / hoist inspection report.

INSTRUCTIONS BELOW:

1. NO VISIBLE TRANSVERSE CRACKS PERMITTED ON HOOK OR HOOK SHANK.
2. AFFIX TRAM POINTS TO HOOK WITH CENTER PUNCH AS INDICATED BY AA IN FIGURE 1. THIS WOULD BE THE NARROWEST PART OF THE HOOK.
3. AFFIX TRAM POINTS TO HOOK AS INDICATED BY BB, FIGURE 1. THIS WILL BE THE SAME MEASUREMENT AS AA.
4. IF AA DIMENSION INCREASES MORE THAN 15% OF BB OR ORIGINAL THROAT OPENING, THE HOOK SHALL BE REPLACED. SEE FIGURE 1.
5. IF HOOK IS TWISTED MORE THAN 10 DEGREES FROM THE CENTER PLAIN OF HOOK (CC FIGURE 2) IT SHALL BE REPLACED.

NOTE: Hooks shall be equipped with latches unless the application makes the use of the latch impractical. When required, a latch SHALL BE provided to bridge the throat opening of the hook for the purpose of retaining slings; chains, etc; under slack conditions. REFER to ANSI B30.10.

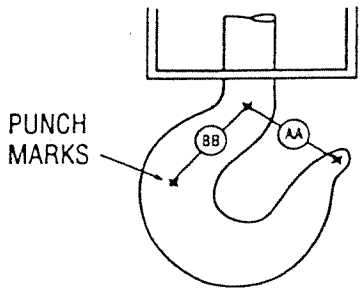

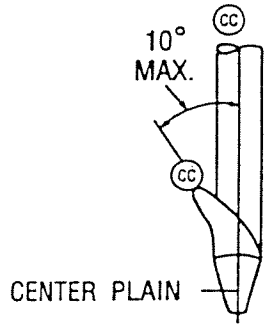

HOOK	DATE	PRE OR POST TEST	SINGLE HOOK DIM.	NORMAL THROAT OPNS. FOR AA	NORMAL THROAT OPNS. FOR BB	% OF TWIST ANGLES FOR CC	INSPECTED BY
MAIN HOOK	8/13/02			12.03	12.	0	J. H.
AUX. HOOK							

BNL F 2916

REF. # 4

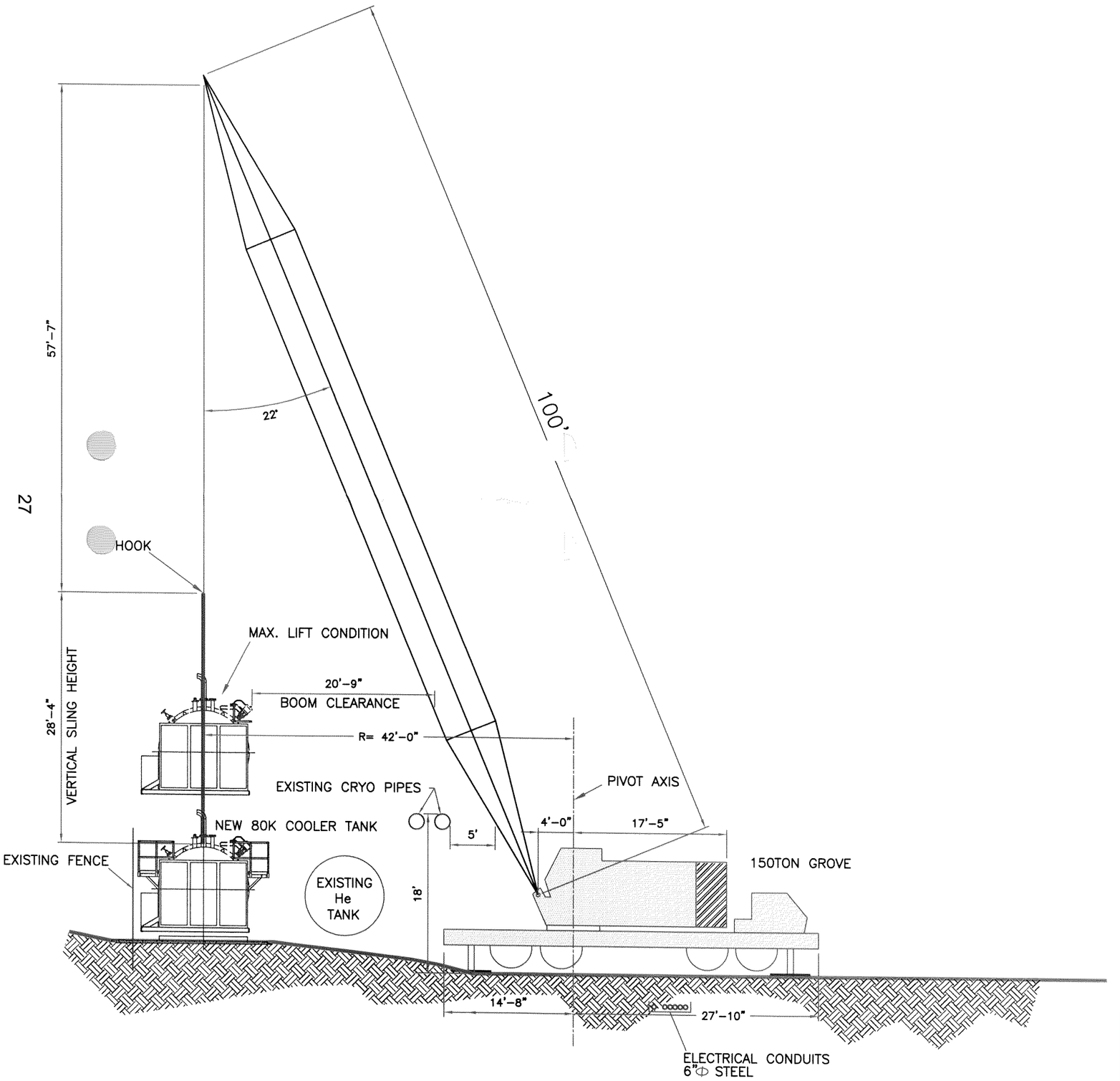

VIEW AT SETTING
LOOKING EAST

NOT TO SCALE

80K COOLER TANK RIGGING CLEARANCES

RHIC / BLDG. 1006B
906-SK-4
PREPARED BY: ALI JAVIDFAR

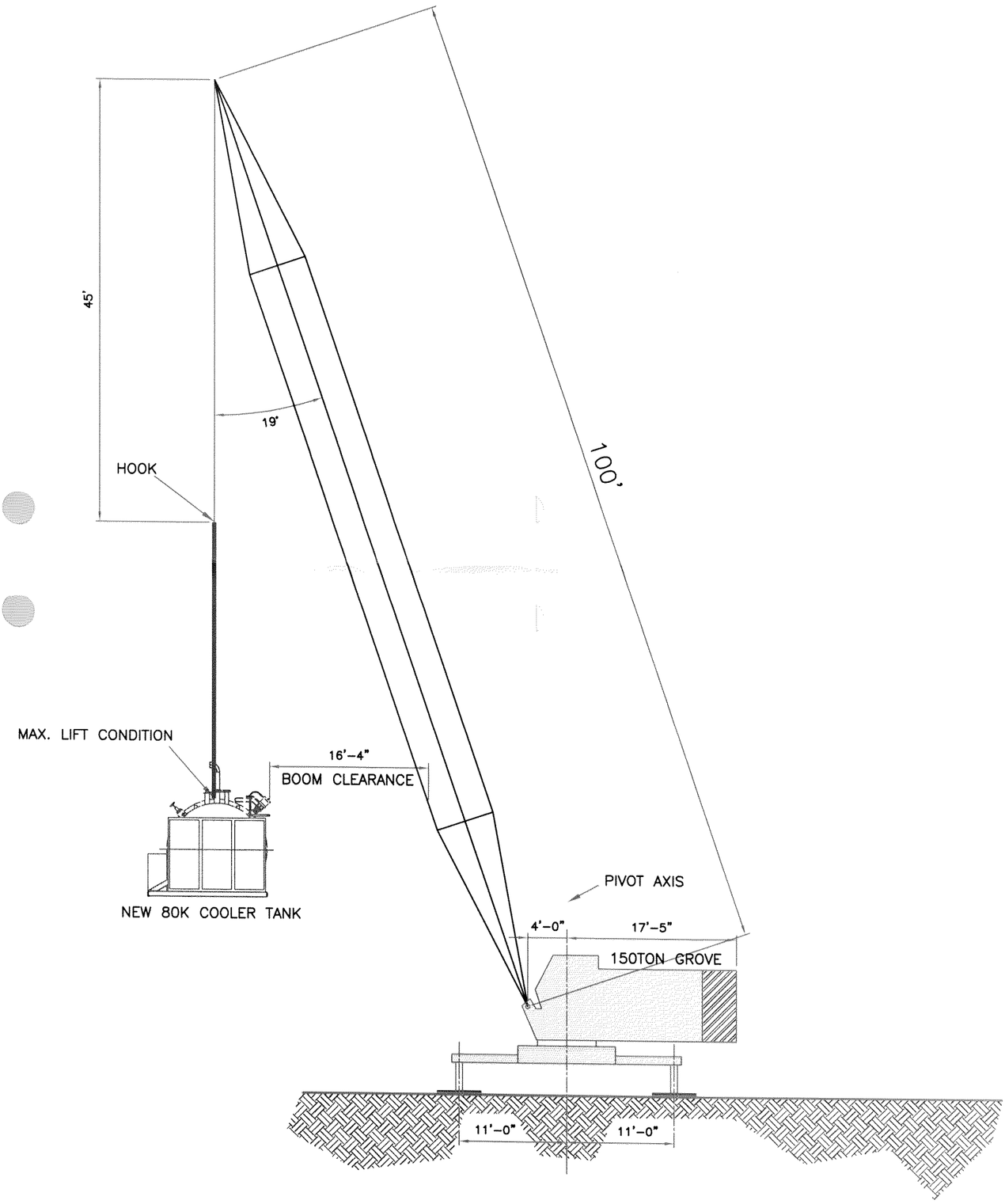

VIEW AT INITIAL LIFT

NOT A CRITICAL LIFT

NOT TO SCALE

80K COOLER TANK RIGGING CLEARANCES

RHIC / BLDG. 1006B
906-SK-3
PREPARED BY: ALI JAVIDFAR